TI-P187-02
CMGT Issue 6

# TDS46M
# Stainless Steel
# Thermodynamic Steam Trap with Maintainable Seat

## Description
The TDS46M is a stainless steel, thermodynamic steam trap that has been specifically designed for low capacity applications up to 46 bar g (where pipe connections permit). As standard the unit is available with either screwed, socket weld or flanged connections.

**TDS46M benefits:**
- Integral strainer.
- Integral air vent.
- Insulation cap.
- Replaceable seat.

## Optional extras
At extra cost a **BDV1** integral blowdown valve can be pre-fitted to the strainer cap, please specify at the time of order placement.

## Standards
This product fully complies with the requirements of the European Pressure Equipment Directive 97/23/EC.

## Certification
These products are available with certification to EN 10204 3.1.
**Note:** All certification / inspection requirements must be specified at the time of order placement.

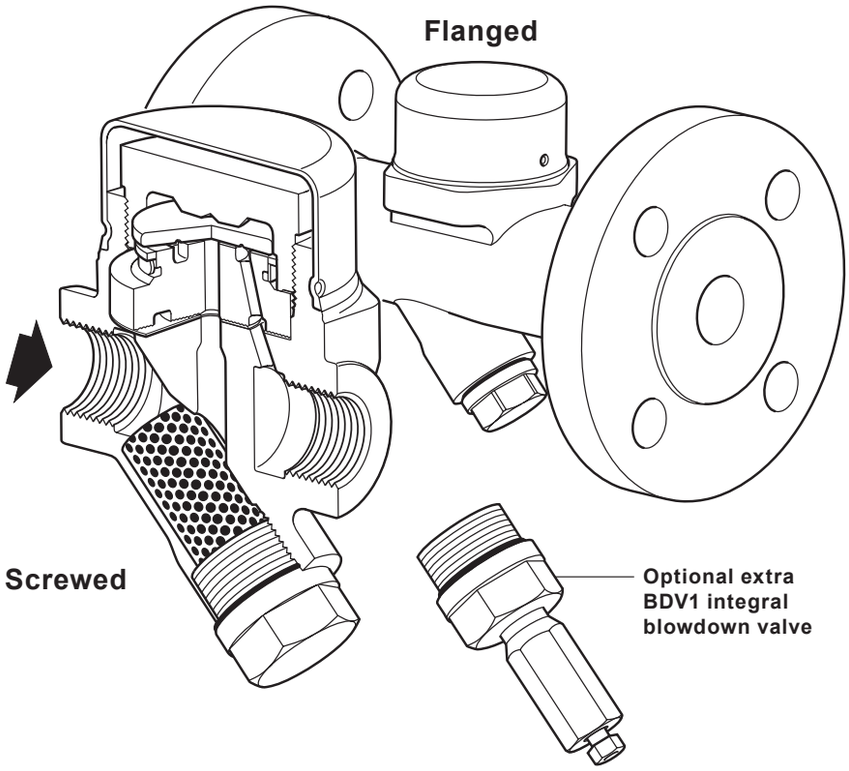


## Sizes and pipe connections
½", ¾" and 1" screwed BSP or NPT.

½", ¾" and 1" socket weld ends to BS 3799 Class 3000 lb.

DN15, DN20 and DN25 integrally flanged EN 1092 PN40, PN100 and ASME class 150, ASME class 300 or ASME class 600.

# Steam traps
## Thermodynamic
### Materials

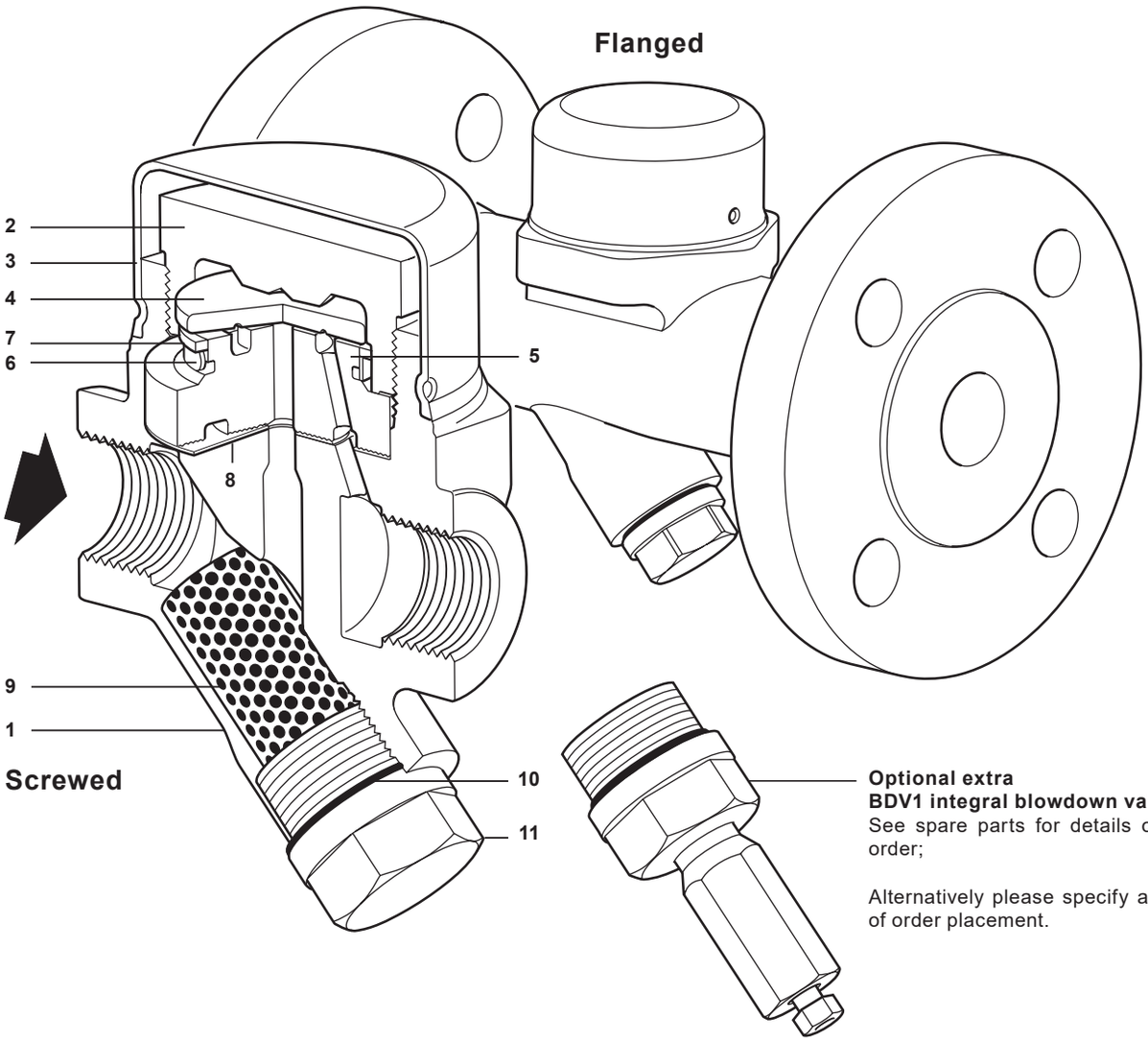


**Optional extra**
**BDV1 integral blowdown valve**
See spare parts for details on how to order;

Alternatively please specify at the time of order placement.



| No. | Part | Material | |
|---|---|---|---|
| 1 | Body | Stainless steel | 1.4308/ASTM A351 CF8 |
| 2 | Top cap | Stainless steel | 1.4301/ASTM A479 304 |
| 3 | Insulating cover | Stainless steel | EN 10088-1 1.4301 |
| 4 | Disc | Hardened steel | 1.2379 |
| 5 | Seat | Hardened steel | 1.2379 |
| 6 | Bimetal ring | Bimetal | |
| 7 | Support | Stainless steel | AISI 304 |
| 8 | Seat gasket | Graphite foil | |
| 9 | Strainer screen | Stainless steel | ASTM A478 316L |
| 10 | Strainer cap gasket | Stainless steel | AISI 304 |
| 11 | Strainer cap | Stainless steel | 1.4308/ASTM A351 CF8 |

## Pressure/temperature limits (ISO 6552) - Screwed, Socket weld and Flanged EN 1092

**Screwed**
**Socket weld**
**Flanged:**
**PN40**
**PN100**

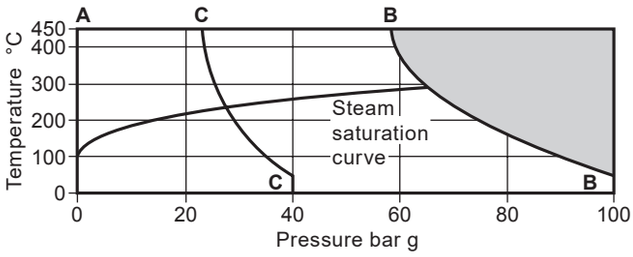


The product **must not** be used in this region or beyond the parameter of the PMA or TMA of the relative end connection.

| | | | |
|---|---|---|---|
| A - B - B | **PN100 Screwed Socket weld** | Body design conditions | PN100 |
| | | PMA Maximum allowable pressure | 100 bar g @ 50 °C |
| | | TMA Maximum allowable temperature | 450 °C @ 58.3 bar g |
| | | Minimum allowable temperature | -50 °C |
| | | PMO Maximum operating pressure | 46 bar g @ 450 °C |
| | | TMO Maximum operating temperature | 450 °C @ 46 bar g |
| | | Minimum operating temperature | 0 °C |
| | | Minimum operating pressure | 1.5 bar g |
| | | Maximum operating backpressure | 80% of upstream pressure |
| | | Designed for a maximum cold hydraulic pressure of: | 150 bar g |
| A - C - C | **PN40** | Body design conditions | PN40 |
| | | PMA Maximum allowable pressure | 40 bar g @ 50 °C |
| | | TMA Maximum allowable temperature | 450 °C @ 23.3 bar g |
| | | Minimum allowable temperature | -50 °C |
| | | PMO Maximum operating pressure for saturated steam service | 28.4 bar g @ 233 °C |
| | | TMO Maximum operating temperature | 450 °C @ 23.3 bar g |
| | | Minimum operating temperature | 0 °C |
| | | Minimum operating pressure | 1.5 bar g |
| | | Maximum operating backpressure | 80% of upstream pressure |
| | | Designed for a maximum cold hydraulic pressure of: | 60 bar g |

# Steam traps
## Thermodynamic

### Pressure / temperature limits (ISO 6552) - Flanged ASME

**Flanged:**
**ASME Class 150**
**ASME Class 300**
**ASME Class 600**

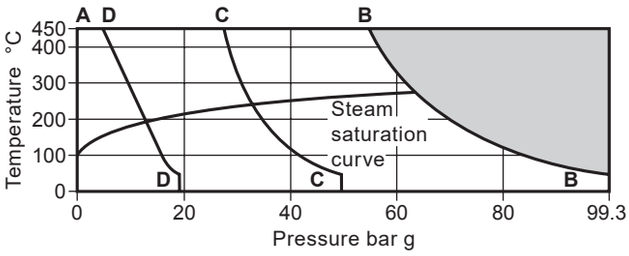


The product **must not** be used in this region or beyond the parameter of the PMA or TMA of the relative end connection.

| | | | |
|---|---|---|---|
| A - B - B | ASME 600 | Body design conditions | ASME Class 600 |
| | | PMA Maximum allowable pressure | 99.3 bar g @ 38 °C |
| | | TMA Maximum allowable temperature | 450 °C @ 54.8 bar g |
| | | Minimum allowable temperature | -50 °C |
| | | PMO Maximum operating pressure | 46 bar g |
| | | TMO Maximum operating temperature | 450 °C @ 46 bar g |
| | | Minimum operating temperature | 0 °C |
| | | Minimum operating pressure | 1.5 bar g |
| | | Maximum operating backpressure | 80% of the upstream pressure |
| | | Designed for a maximum cold hydraulic pressure of: | 149 bar g |
| A - C - C | ASME 300 | Body design conditions | ASME Class 300 |
| | | PMA Maximum allowable pressure | 49.6 bar g @ 38 °C |
| | | TMA Maximum allowable temperature | 450 °C @ 27.4 bar g |
| | | Minimum allowable temperature | -50 °C |
| | | PMO Maximum operating pressure for saturated steam service | 33 bar g |
| | | TMO Maximum operating temperature | 450 °C @ 27.4 bar g |
| | | Minimum operating temperature | 0 °C |
| | | Minimum operating pressure | 1.5 bar g |
| | | Maximum operating backpressure | 80% of the upstream pressure |
| | | Designed for a maximum cold hydraulic pressure of: | 74.4 bar g |
| A - D - D | ASME 150 | Body design conditions | ASME Class 150 |
| | | PMA Maximum allowable pressure | 19 bar g @ 38 °C |
| | | TMA Maximum allowable temperature | 450 °C @ 4.6 bar g |
| | | Minimum allowable temperature | -50 °C |
| | | PMO Maximum operating pressure for saturated steam service | 14 bar g |
| | | TMO Maximum operating temperature | 450 °C @ 4.6 bar g |
| | | Minimum operating temperature | 0 °C |
| | | Minimum operating pressure | 1.5 bar g |
| | | Maximum operating backpressure | 80% of the upstream pressure |
| | | Designed for a maximum cold hydraulic pressure of: | 28.5 bar g |





Polígono Industrial O Rebullón s/n. 36416 - Mos - España - rodavigo@rodavigo.com

## Dimensions (approximate) in mm

| Size | | A | B | | | | C | D | E | F |
|---|---|---|---|---|---|---|---|---|---|---|
| | | | Screwed | Socket weld | Flanged | | | | Withdrawal distance | Withdrawal distance |
| | | | | | PN40 ASME 150, 300, 600 | PN100 | | | | |
| ½" | DN15 | 58 | 78 | 92 | 150 | 210 | 61 | 59 | 40 | 30 |
| ¾" | DN20 | 61 | 95 | 92 | 150 | 210 | 61 | 63 | 40 | 30 |
| 1" | DN25 | 65 | 95 | 92 | 160 | 230 | 61 | 67 | 40 | 30 |

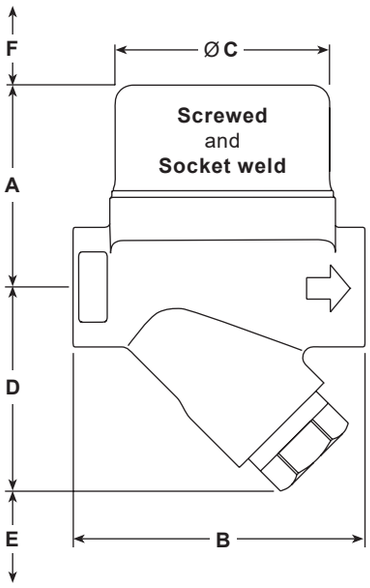


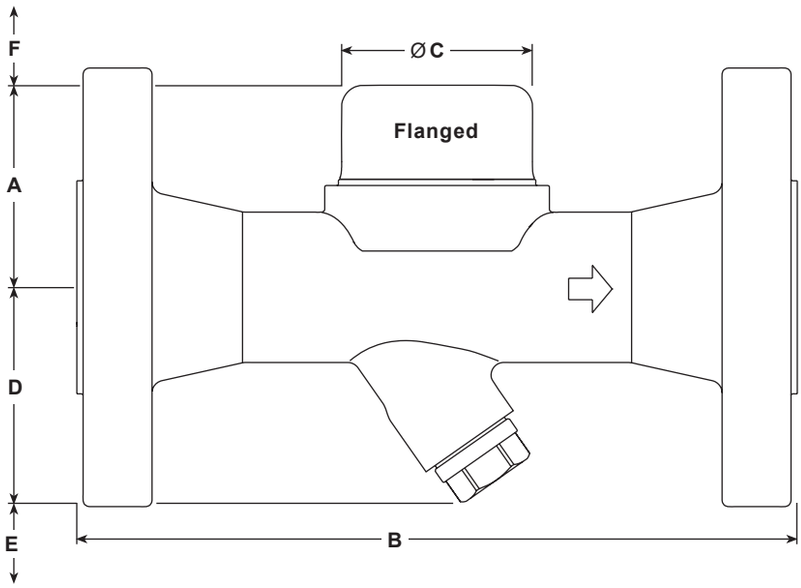


## Weights (approximate) in kg

| Size | | Screwed | Socket weld | Flanged | | | | |
|---|---|---|---|---|---|---|---|---|
| | | | | ASME 150 | ASME 300 | ASME 600 | PN40 | PN100 |
| ½" | DN15 | 1.38 | 1.49 | 2.46 | 2.96 | 3.06 | 3.06 | 4.36 |
| ¾" | DN20 | 1.64 | 1.64 | 3.16 | 4.06 | 4.26 | 3.96 | 6.26 |
| 1" | DN25 | 1.90 | 1.90 | 4.16 | 5.16 | 5.46 | 4.86 | 8.16 |

## Capacities

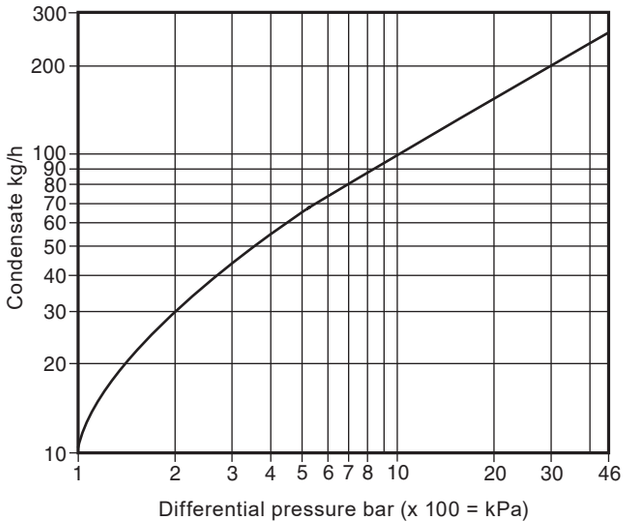


## Safety information, installation and maintenance

For full details see the Installation and Maintenance Instructions (IM-P187-05) supplied with the product.

### Installation note:

The TDS46M is designed for installation with the disc in a horizontal plane with the insulating cover at the top.

It is recommended that a non-return valve is fitted when discharging condensate into return lines where backpressure is experienced. It is also recommended that a diffuser is fitted when discharging to atmosphere.

For ease and maintenance, consideration should be given to fitting isolation valves upstream and downstream of the steam trap.

## How to order

**Example:** 1 off Spirax Sarco DN15 TDS46M thermodynamic steam trap having flanged EN 1092 PN40 connections.

## Spare parts

Please note that the spares shown are the same for the screwed, socket weld and flanged versions.
The spare parts available are shown in solid outline.
Parts drawn in a grey line are not supplied as spares.

### Available spares

| | |
|---|---|
| Insulating cover | **3** |
| Top cap, seat and disc assembly | **2**, **4**, **5**, **6**, **7**, **8** |
| Strainer screen and gasket | **9**, **10** |
| Set of gaskets (packet of 3 sets) | **8**, **10** |
| BDV1 blowdown valve retrofit kit | |

### How to order spares

Always order spares by using the description given in the column headed 'Available spares' and state the size and type of trap.

**Example**: 1 off Top cap, seat and disc assembly for a Spirax Sarco DN15 TDS46M thermodynamic steam trap.

**Cautionary note regarding disassembly and assembly of the unit:**

Removal of the following parts:

- top cap (2),
- strainer cap (11) and the
- optional BDV2 retrofit kit should be carried out in a workshop, not whilst the trap is connected to the pipeline (PC) connector.

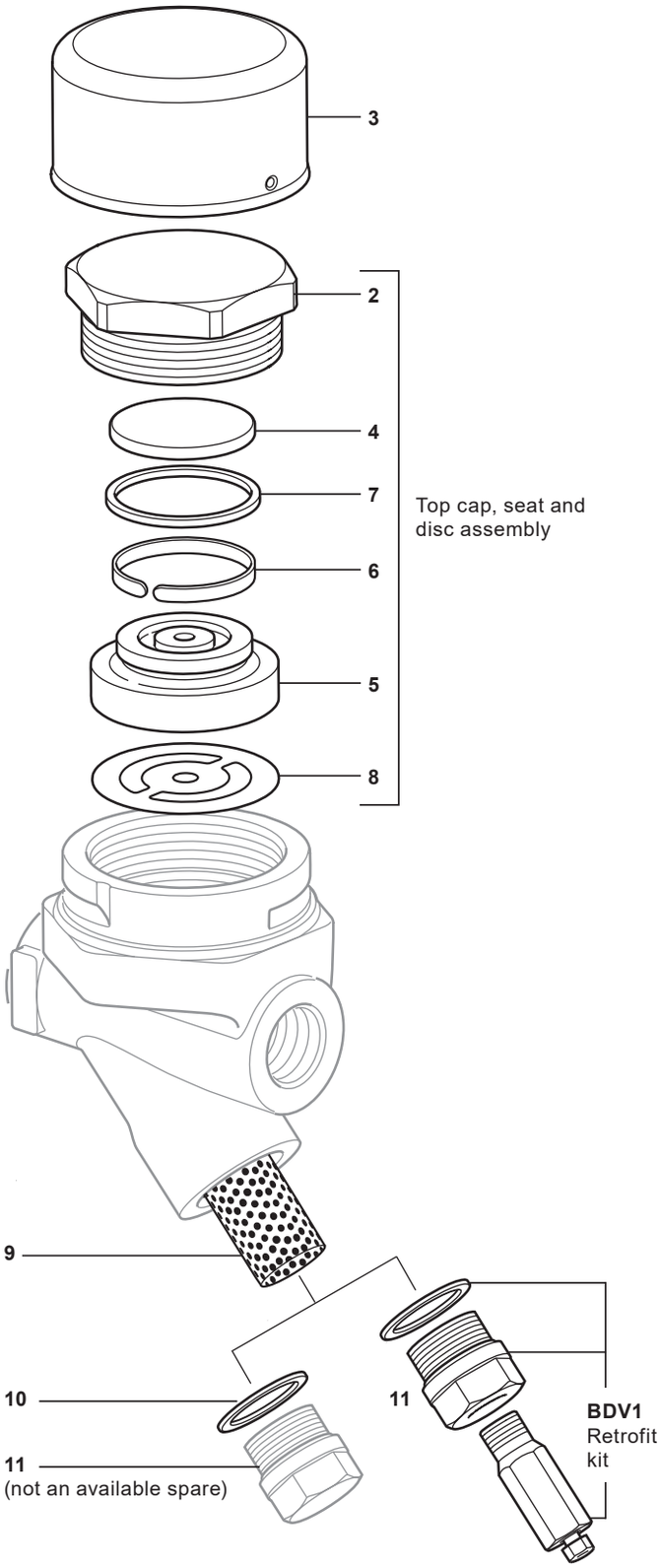


## Recommended tightening torques (for suitably lubricated threads)

| Item | Part | mm | N m | (lbf ft) |
|---|---|---|---|---|
| **2** | Top cap | 50 A/F | 400 | 295 |
| **11** | Strainer cap | 24 A/F | 110 | 46.5 - 48.7 |